12V 108Ah

LVDC108-12 G27

Lead Carbon GEL Deep Cycle battery

LIVEN LVDC Series

LVDC series are manufacturing with Lead Carbon active material to perform in partial state of charge (PSoC) applications and double separator configuration. LVDC series are AGM-GEL technology Valve Regulated Lead Acid (VRLA) suitable for Deep Cycle applications. Electrolyte + GEL for longer cycle life. Maintenance-Free Sealed Lead Acid Battery.

Applications:

- Wheelchairs
- Golf trolleys
- Electric sweepers
- Floor machines
- Electric vehicles
- Lawn mowers
- Portable power
- Railway and Marine systems
- Medical equipments
- Renewable energies

Dimensions:

Length	306±1.5mm (12.5in)
Width	168±1.5mm (6.61in)
Height	208±1.5mm (8.19in)
Total Height	214±1.5mm (8.43in)

Specifications:

Cells Per Unit	6
Voltage Per Unit	12V
Nominal Capacity	108.0Ah @20hour-rate to 1.75V per cell @25°C 96.0Ah @5hour-rate to 1.75V per cell @25°C
Weight	Approx. 27.8Kg ±2% (61.3lbs)
Terminal	R8.8
Recommended Maximum Charging Current	21.6A
Cycle Use Voltage	14.40V~14.70V @ 25°C Temperature Compensation: -4mV/°C/Cell
Operating Temperature Range	Discharge: -20°C~55°C Charge: 0°C~40°C Storage: -15°C~40°C
Normal Operating Temperature Range	25°C±5°C
Self Discharge	LIVEN Valve Regulated Lead Acid (VRLA) batteries can be stored for up to 6 months at 25°C and then recharging is recommended. Monthly Self-discharge ratio is less than 3% at 25°C.Please charge batteries before using.
Container Material	ABS

Technical Drawings:

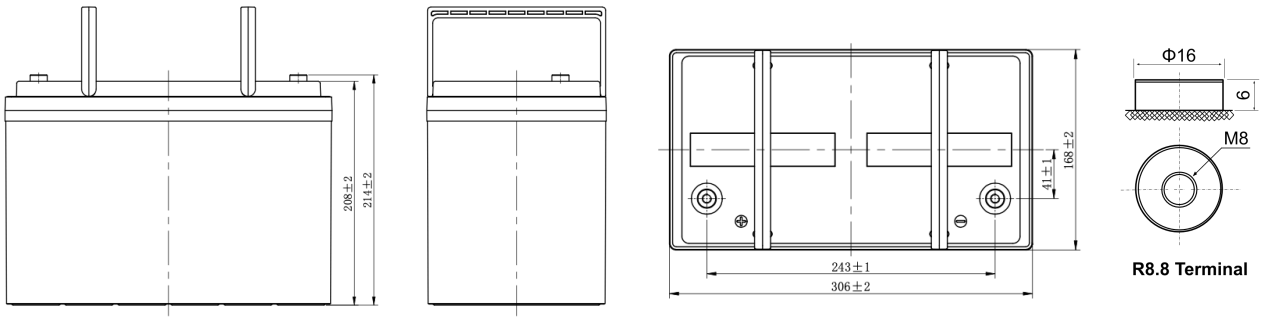

Constant Current Discharge (CC, Unit: A) at 25ºC (77ºF)

Voltage (V)	Capacity (Ah)				Reserve Capacity (Min)	
	20h	10h	5h	3h	25A	75A
12	108	104	96	90	195	44

Charging Profile

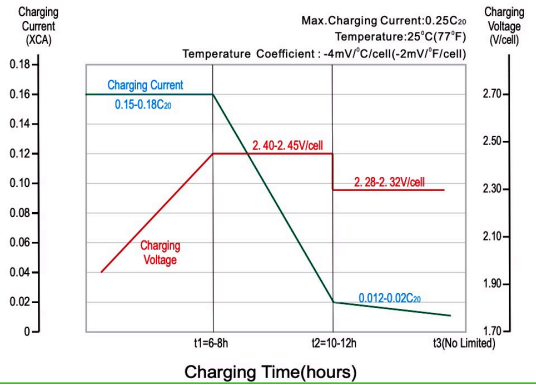

Relationship of OCV and State Of Charge(25°C,77°F)

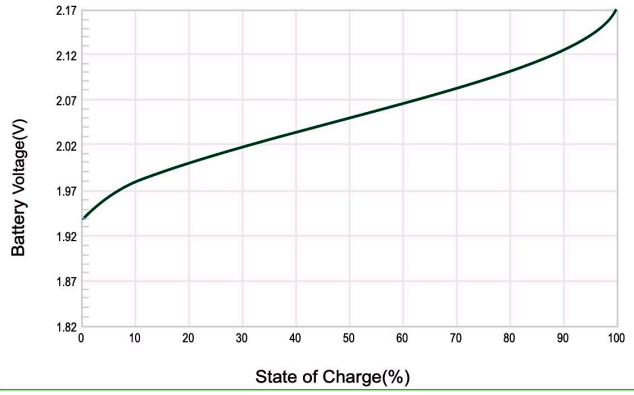

Cycle Life in Relation to Depth Of Discharge

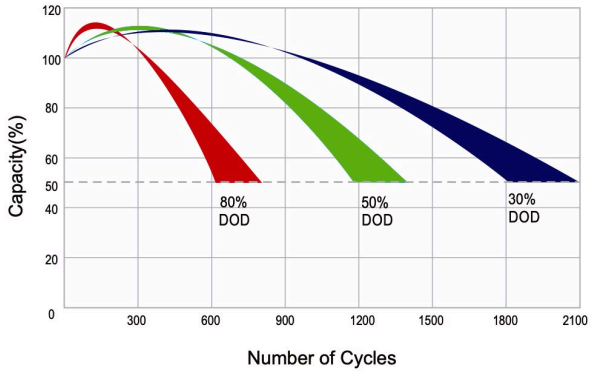

Self-discharge Characteristic

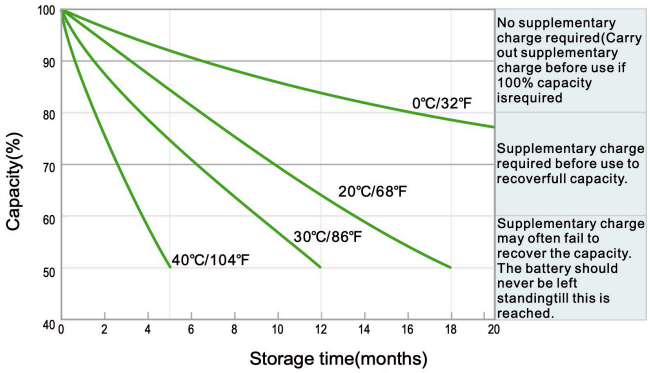

The Max storage time shouldn't be above 15 months

V03 24/04

(Note)All above information shall be changed without prior notice, LIVEN Battery reserves the right to explain and update the latest information.